FORENSCOPE
Innovation for Forensics

For More Information

MOTORIZED TROLLEY SYSTEM

THE POWER OF PRECISION
IMAGING IN THE LAB



100% MANUFACTURED BY FORENSCOPE

1YEAR WARRANTY FORENSCOPE

CONTINIOUS TECHNICAL SUPPORT FORENSCOPE

ERGONOMIC AND VIBRATION FREE STRUCTURE

The fixed body reduces vibration during long exposures. The ergonomic design provides comfort during extended use.

PRECISE HEIGHT ADJUSTMENT AND ANGLED SURFACE SUPPORT

Precise height adjustment up to 125 cm and a tiltable surface apparatus up to ±6°.

ADJUSTABLE ARM

Extends up to 85 cm with 180° horizontal rotation capability.

FOOT PEDAL

Allows precise height adjustment and imaging without physical contact with the device.

32-INCH 4K MONITOR

Enables high-resolution and detailed display of device screens via HDMI connection.

WIDE RANGE OF MOTION

Thanks to its wheeled structure, it can be easily transported within the laboratory for imaging at any desired location.

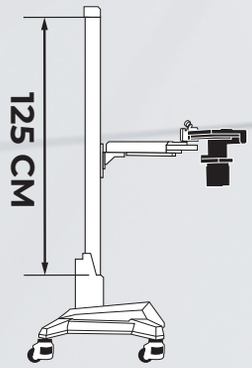

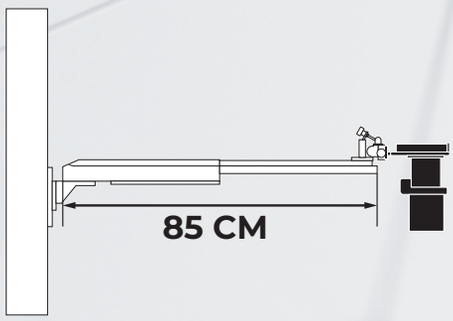

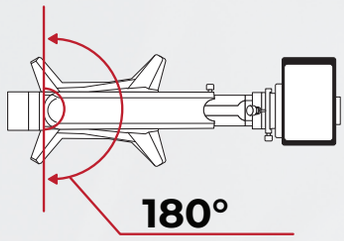

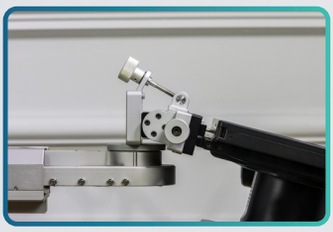

±6° TILTABLE SURFACE APPARATUS



32" 4K MONITOR

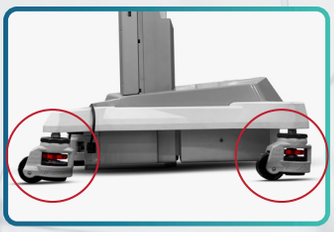

WIDE RANGE OF MOTION



FOOT PEDAL



SEMEN ON T-SHIRT



BLOOD ON JEANS



BLOOD ON JACKET

info@forenscope.com
www.forenscope.com
/ForenScope
/forenscope_international
/ForenScope
/ForenScope
/ForenScope